Copyright © 2001, 2016, 2022, ASSA ABLOY Accessories and Door Controls Group, Inc. All rights reserved.
Reproduction in whole or in part without the express written permission of ASSA ABLOY Accessories and Door Controls Group, Inc. is prohibited.

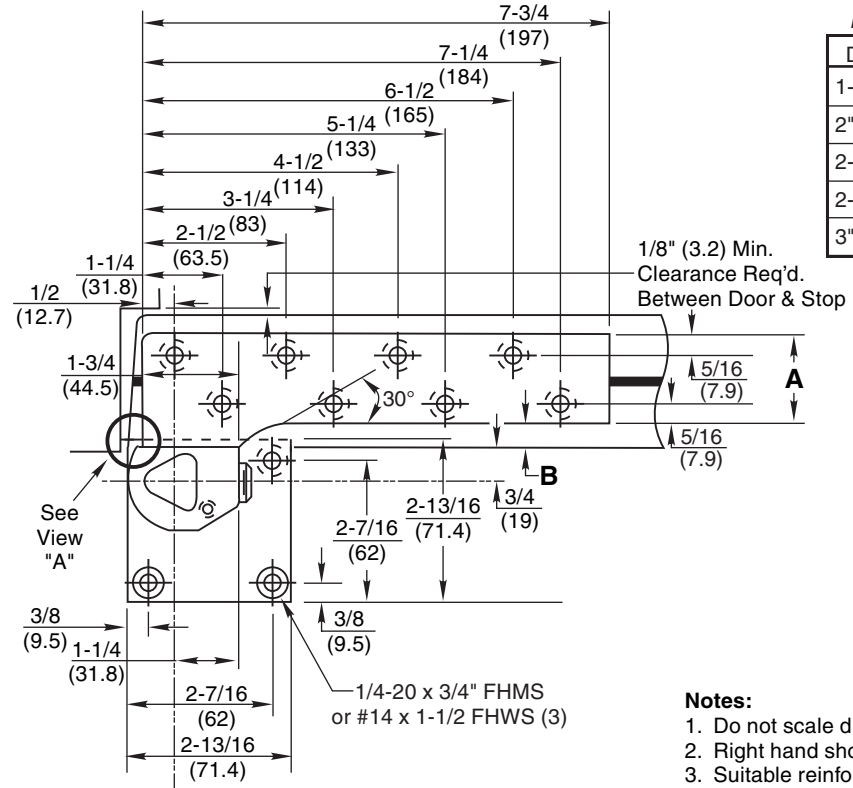

For door thickness not listed, use next smaller size.

Door Size	Dim. A	Dim. B	Max. Lead Thk.
1-3/4 (44.5)	1-1/4 (31.8)	1/4 (6.4)	9/32 (7.1)
2" (50.8)	1-3/8 (34.9)	5/16 (7.9)	3/8 (9.5)
2-1/4 (57.2)	1-1/2 (38.1)	3/8 (9.5)	15/32 (11.9)
2-1/2 (63.5)	1-5/8 (41.3)	7/16 (11)	9/16 (14.3)
3" (76.2)	2" (50.8)	1/2 (12.7)	3/4 (19)

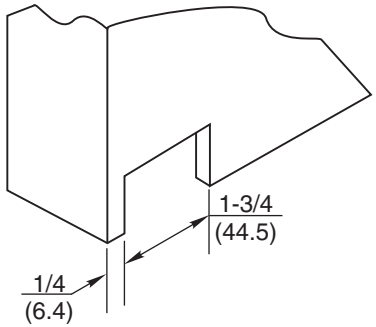

View "A"

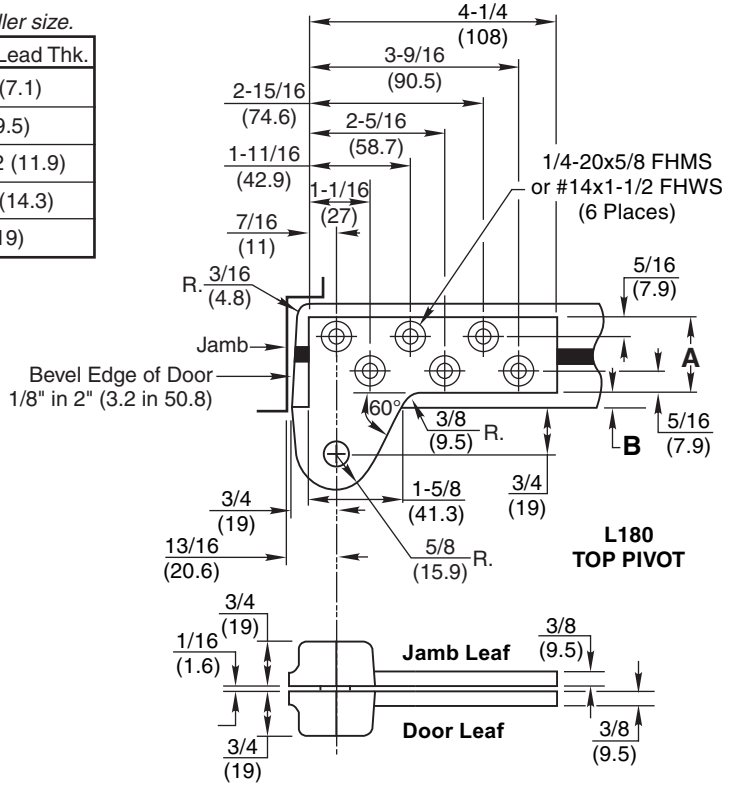

Notes:

1. Do not scale drawing.
2. Right hand shown.
3. Suitable reinforcing by others.
4. Max. degree of opening 180°, trim permitting.
5. Leadlining by others.
6. Maximum weight limitation is 800 lbs.
7. Arm drilled to receive 1/4-20 x 1" FHMS or #14 x 2" FHWS.
8. For Wood Doors: pre-drill Arm & Top Pivot holes to prevent splitting.
9. If vertical adjustment is required two 1/16" shims are provided. Place shims between arm and spindle shoulder collar.
10. All dimensions are in inches (mm).

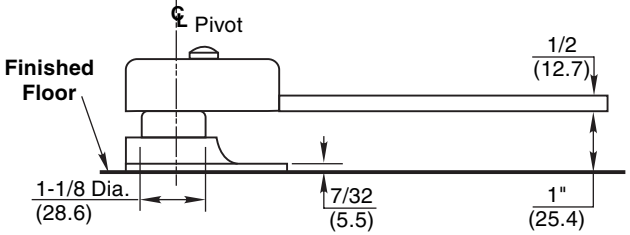

Door Mortised "A" Deep for Arm

	"A"
1/4 Threshold	1" (25.4)
1/2 Threshold	3/4 (19)

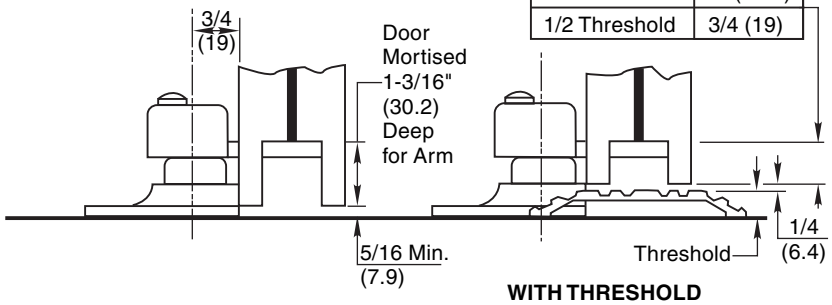

L147 Pivot Set
3/4" Offset
For Lead Lined Doors

NORTON RIXSON
ASSA ABLOY

TEMPLATE NUMBER	REV	DATE
PS30350	3	01/22

Approved 2023-12-15