Copyright © 2006, 2010, 2022, ASSA ABLOY Accessories and Door Controls Group, Inc. All rights reserved.
Reproduction in whole or in part without the express written permission of ASSA ABLOY Accessories and Door Controls Group, Inc. is prohibited.

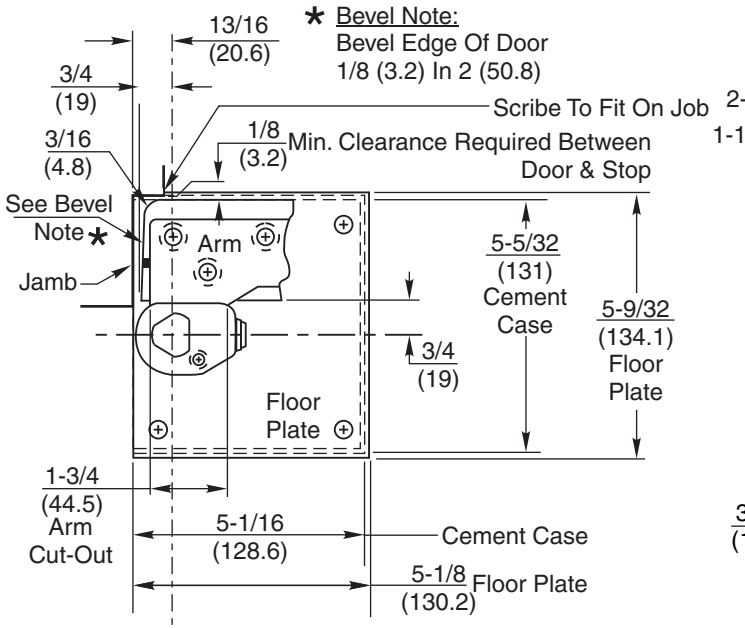

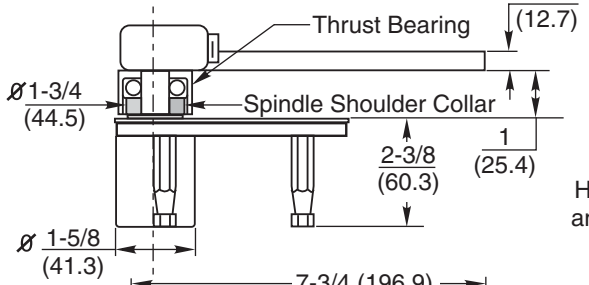

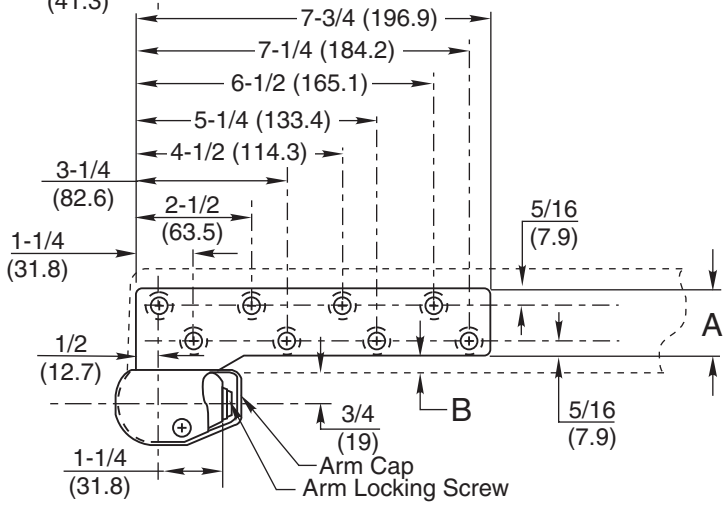

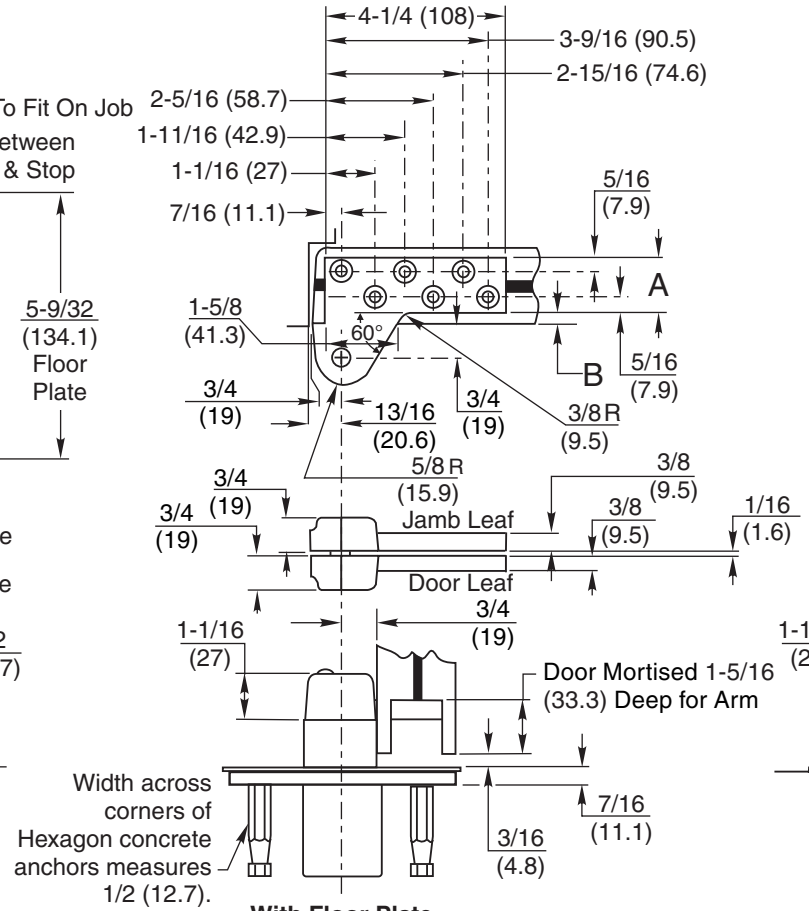

With Floor Plate

Set cement case 1/16 (1.6) below surface of finished floor

Notes:

1. Do not scale drawing.
2. Dimensions given in inches (mm).
3. Bottom arm drilled to receive 1/4-20 x 1" FHMS or #14 x 2" FHWS. Top Pivot drilled to receive 1/4-20 x 5/8" FHMS or #14 x 2" FHWS.
4. For Wood Doors: Pre-Drill Arm And Top Pivot Holes To Prevent Splitting.
5. If Vertical Adjustment Is Required, Two 1/16 (1.6) Shims Are Provided. Place Shims Between Arm And Spindle Shoulder Collar.
6. Maximum Degree Of Opening, Trim Permitting Is 180°. Suitable Reinforcement By Others. Lead Lining By Others. Right Hand Shown.

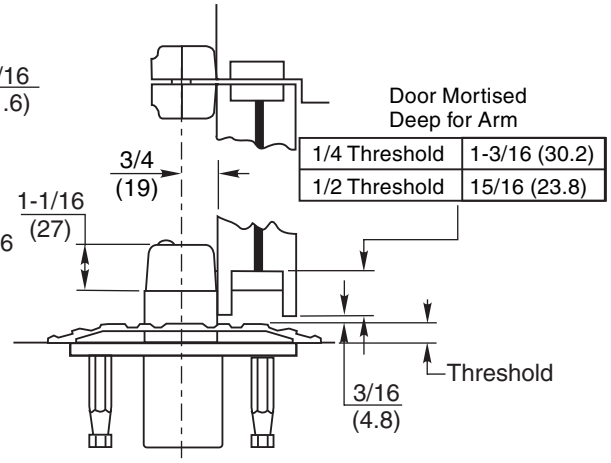

1/4 Threshold	1-3/16 (30.2)
1/2 Threshold	15/16 (23.8)

With Threshold

Set Cement Case Flush With Finished Floor

To Maintain Proper Clearance Use One (1) 1/16 (1.6) Shim Between The Arm And Arm Bearing Washer.

Note:

For Door Thickness Not Listed, Use Next Size Smaller Door Size For Preparation.

Door Size	A	B	Max. Lead Th'k
1-3/4"	1-1/4 (31.8)	1/4 (6.4)	9/32 (7.1)
2"	1-3/8 (34.9)	5/16 (7.9)	3/8 (9.5)
2-1/4"	1-1/2 (38.1)	3/8 (9.5)	15/32 (11.9)
2-1/2"	1-5/8 (41.3)	7/16 (11.1)	9/16 (14.3)
3"	2 (50.8)	1/2 (12.7)	3/4 (19)

Table Is Based On Lead Being Placed In Center Of Door.

L117 Pivot Set
3/4" Offset-Handed
For Lead Lined Doors

NORTON RIXSON
ASSA ABLOY

TEMPLATE NUMBER	REV	DATE
PS30045	3	01/22

Approved 2023-12-15