TRADEMARK HARDWARE
WORLD OF QUALITY HARDWARE

Product Specs

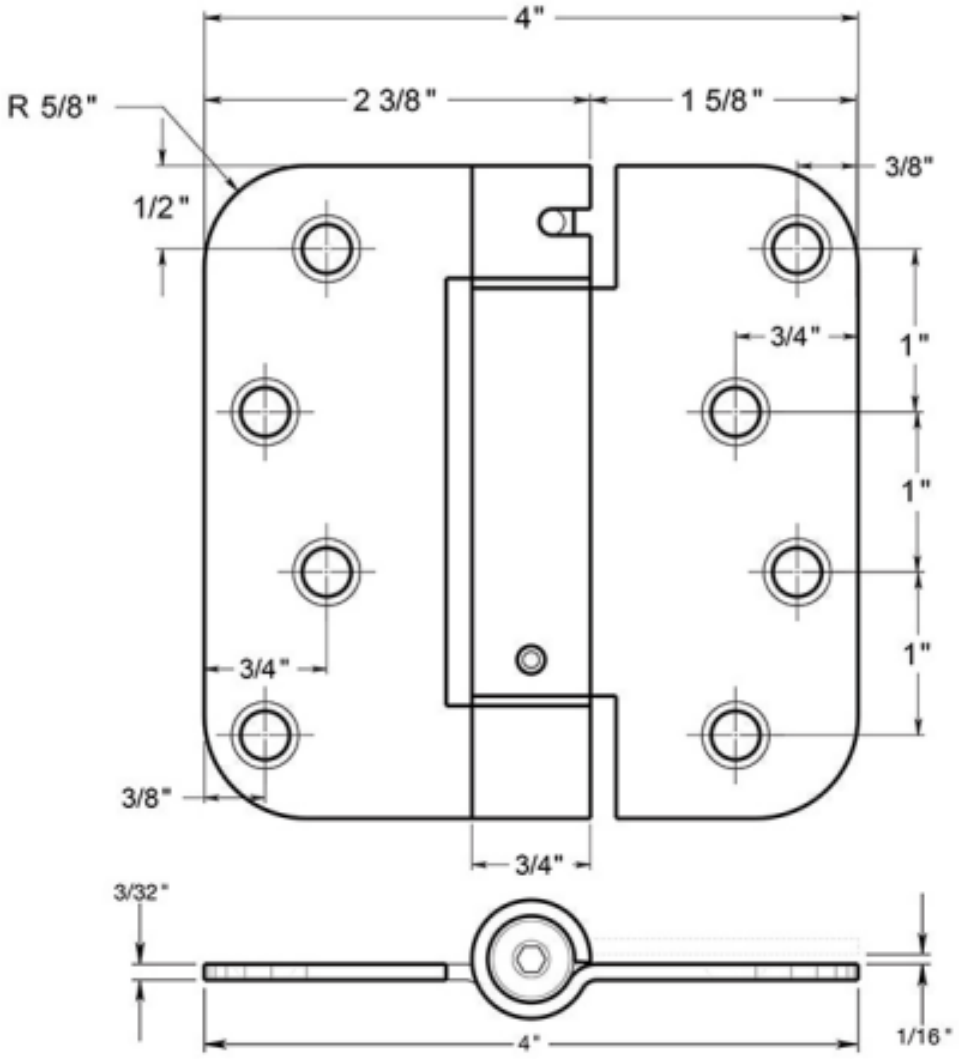

MAXIMUM RECOMMENDED DOOR SIZE 3'-0" WIDE x 7'-0" HEIGHT				
MAXIMUM RECOMMENDED DOOR WEIGHT (LBS)			HINGE SELECTIONS	
3.5" x 3.5"	4" x 4"	4.5" x 4.5"	Spring Hinges	Butt Hinges
50	60	70	1 EACH	2 EACH
70	85	115	2 EACH	1 EACH
90	110	150	3 EACH	NONE

SKU:DTDSH4R5

www.tmhardware.com 845-388-1300 845-388-1388 sales@tmhardware.com