Installation Instructions

Tubular Pocket Door Lock, Dummy for Double Door Application

EMTEK

1. Door Prep

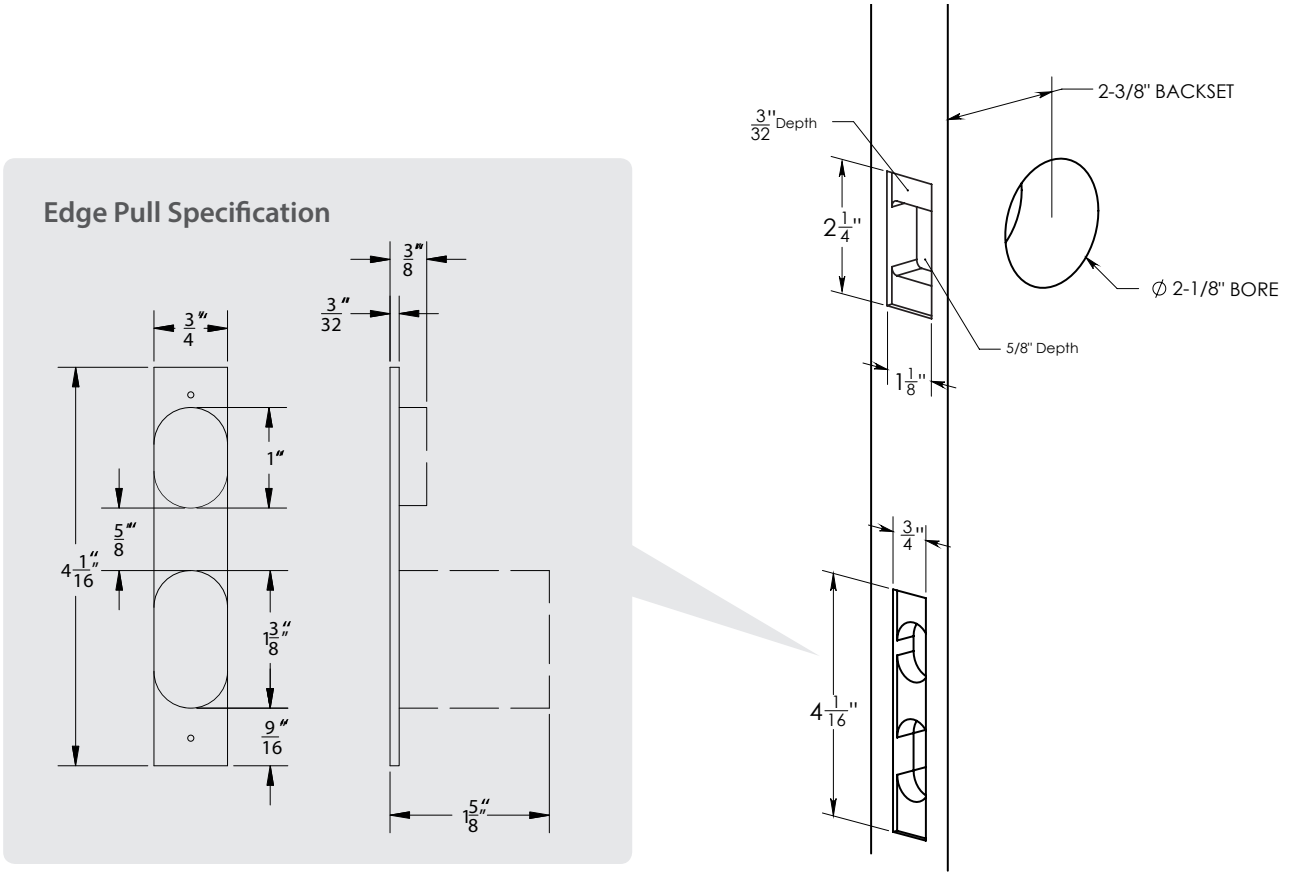

2. Dummy for Double Door Application

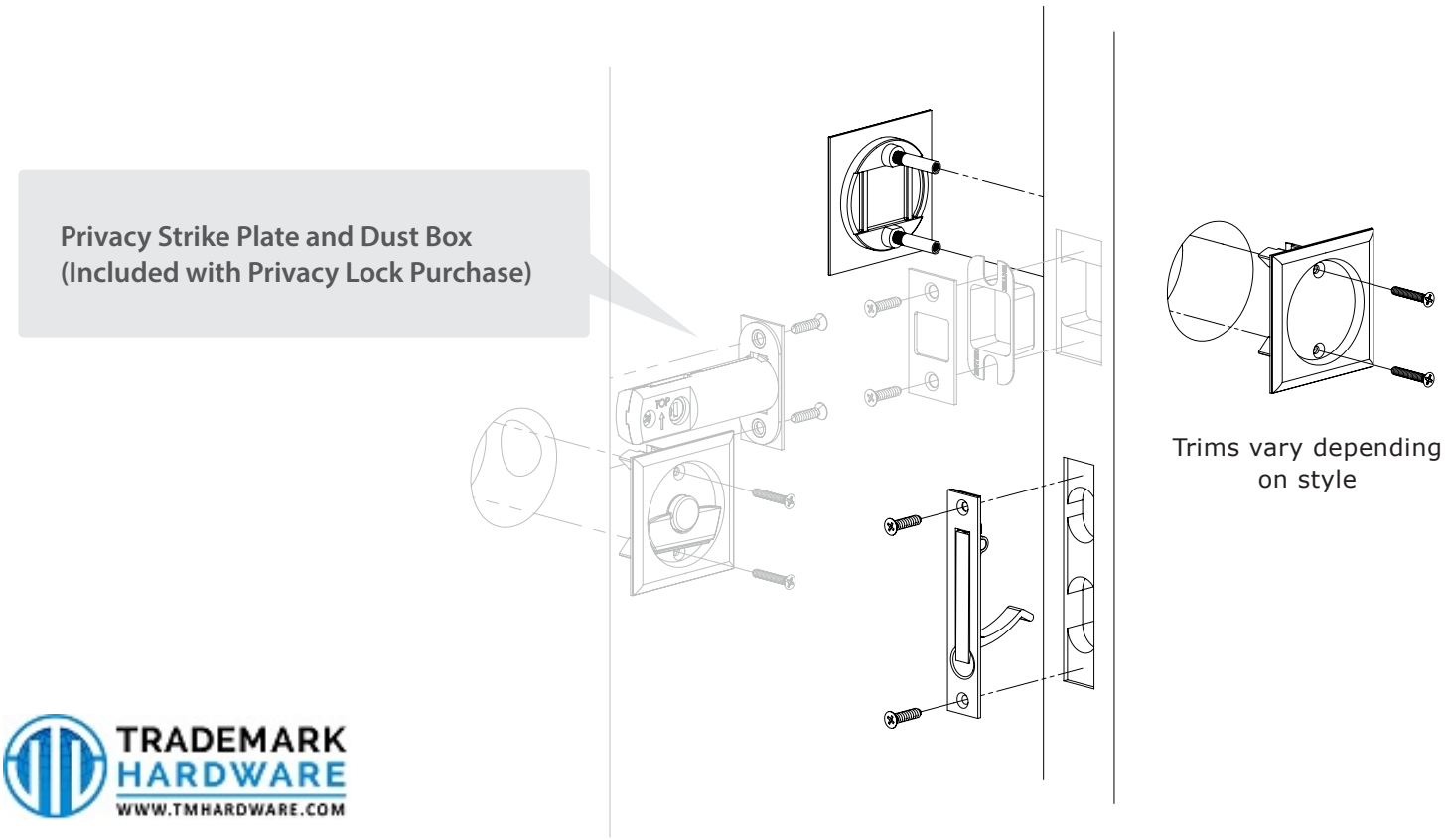

TRADEMARK HARDWARE
WWW.TMHARDWARE.COM