Yale® is a registered trademark of Yale Security Inc. Copyright © 1995, 2008, Yale Security Inc. All rights reserved.
Reproduction in whole or in part without the express written permission of Yale Security Inc. is prohibited.

ASSA ABLOY is the global leader in door opening solutions, dedicated to satisfying end-user needs for security, safety and convenience.

5400LN SERIES Key-In Lever Cylindrical Locks				
Backset	1/2" Throw		3/4" Throw	
	Latch No.	Link No.	Latch No.	Link No.
2-3/4 (70)	693 or 694	-	480B	-
3-3/4 (95)	3693 or 3694	-	3480B	-
5 (127)	693 or 694	481DL	480B	481DL
6 (152)	3693 or 3694	481	3480B	481
7 (178)	693 or 694	482	480B	482
8 (203)	3693 or 3694	482	3480B	482
18 (457)	693 or 694	484	480B	484
19 (483)	3693 or 3694	484	3480B	484

Notes:

1. For strike preparation refer to:
   495 Strike - Template No. 7102-0005
   497 Strike - Template No. 7102-0003
2. The 5400LN locks can be installed on 1-3/8" (35mm) thick doors by using two (2) #14-5401-6644 spacers under the inside and outside roses.
3. For wood door preparation refer to Template No. 7150-0057.
4. Door manufacturer must provide supports within the door to keep the door from collapsing when lock is installed. Back of latch case must also be supported.
5. All dimensions given in inches (mm).
6. For universal or square edge doors use latchbolts with flat front (i.e. F694, F480B, etc.)
7. Dimensions marked with * have tolerances of +1/32, -0.

DO NOT SCALE

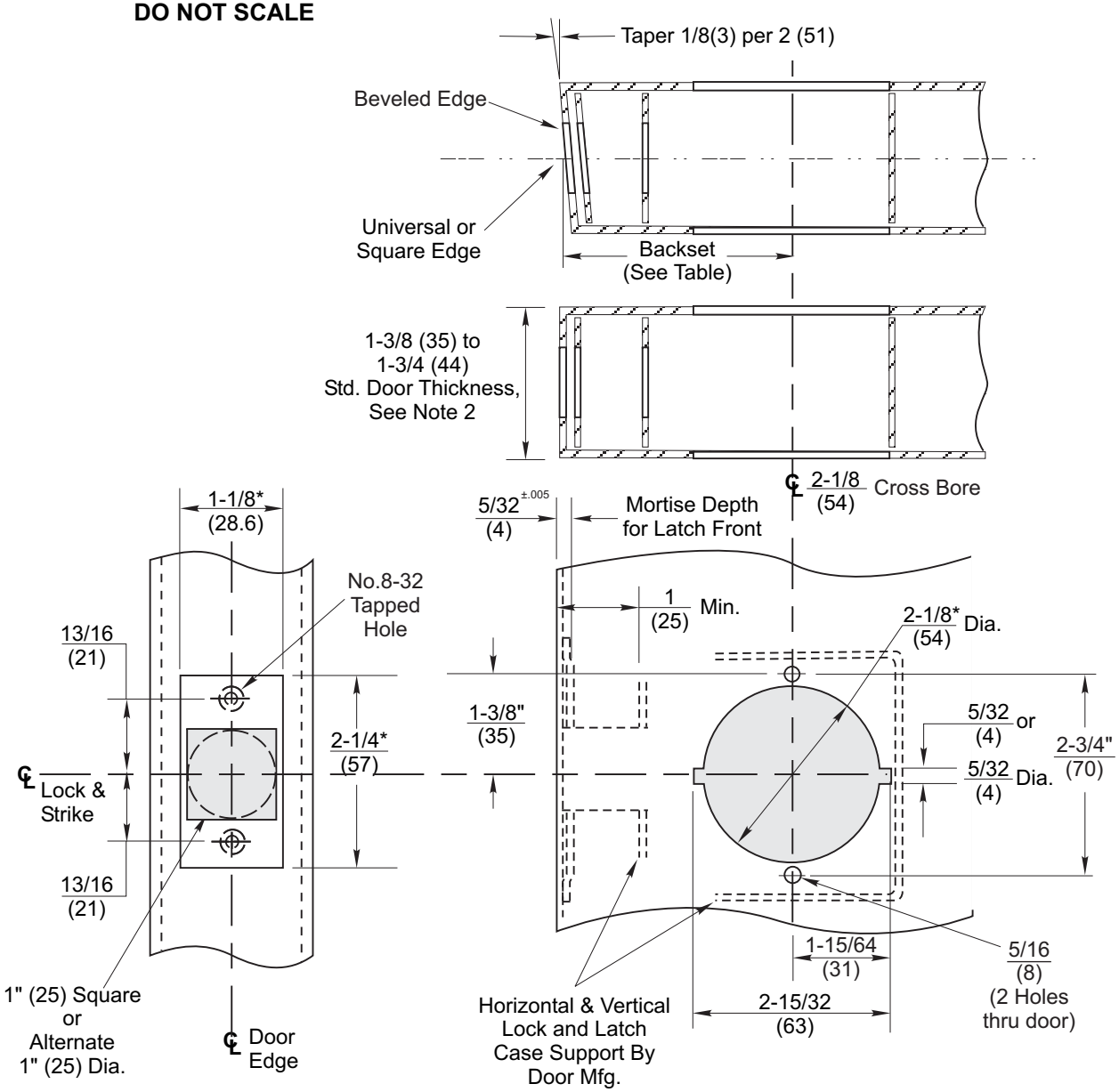

5400LN Series Key-in-Lever Cylindrical Locks - 1-1/8" Wide Front
H.M. Door Preparation (See ANSI/BHMA A156.115)
2-3/4" and Optional Backsets

Yale

An ASSA ABLOY Group brand

www.yalecommercial.com

TEMPLATE NUMBER	DATE
7150-0056	4-08