TRADEMARK HARDWARE
WORLD OF QUALITY HARDWARE

Quick Reference

Hinge cup centerpoint

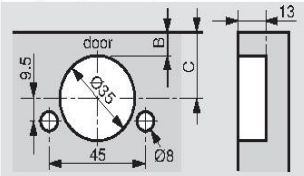

C = cup centerpoint					
20.5	21.5	22.5	23.5	24.5	25.5
13/16"	27/32"	7/8"	15/16"	31/32"	1"
3	4	5	6	7	8
B = Boring distance					

Hinges per door

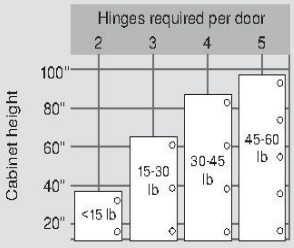

This chart can serve as a guide for determining the number of hinges per door. Note that door weight can also determine the number of hinges required.

NOTE: The distance between the top and bottom hinges must be greater than the width of the door

Hinge abbreviation key

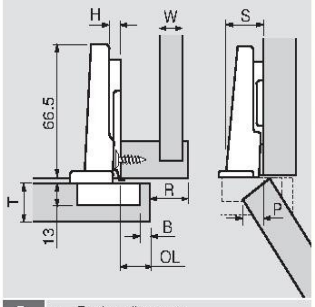

B	=	Boring distance
H	=	Plate height
OL	=	Door overlay
P	=	Door protrusion
R	=	Reveal
S	=	Side arm protrusion
T	=	Door thickness
W	=	Side panel width
FD	=	Fixed distance

Conversion chart

mm	inch	
1	1/32	.031
1.5	1/16	.063
2	3/32	.094
3	1/8	.125
4	5/32	.156
5	3/16	.188
5.5	7/32	.219
6	1/4	.25
7	9/32	.281
8	5/16	.313
9	11/32	.344
9.5	3/8	.375
10	13/32	.406
11	7/16	.438
12	15/32	.469
13	1/2	.5
13.5	17/32	.531
14	9/16	.563
15	19/32	.594
16	5/8	.625
17	21/32	.656
17.5	11/16	.688
18	23/32	.719
19	3/4	.75
20	25/32	.781
20.5	13/16	.813
21	27/32	.844
22	7/8	.875
23	29/32	.906
24	15/16	.938
24.5	31/32	.969
25.4	1	1

Fixed distance (FD)

The distance that the cup overlays the cabinet side panel when a hinge is attached to a 0 mm mounting plate.
This is used to calculate hinge overlay with the formula **X + B minus H = OL**
(Fixed distance + boring distance minus plate height = overlay)