INCHES
MILLIMETERS
Nominal, subject to tolerance extremes.

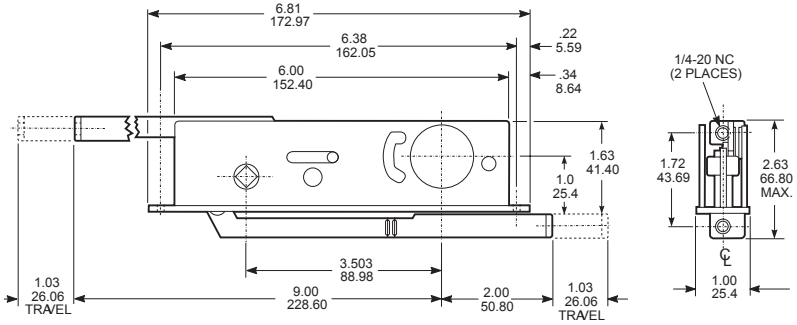

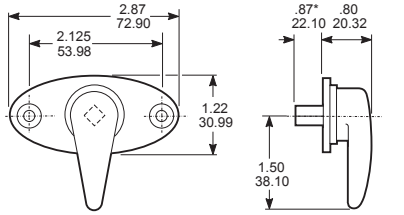

4060 Turn

*FOR1-3/4" THICKDOOR

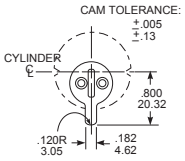

Cylinder Cam

1875 deadbolts are operable by any standard 1-5/32" diameter mortise cylinder with special MS® cam dimensioned as shown. Cylinders with MS® cams can be readily obtained from most cylinder manufacturers. See page SW-28 for cylinder makeand trim ring information.

INSTALLATION

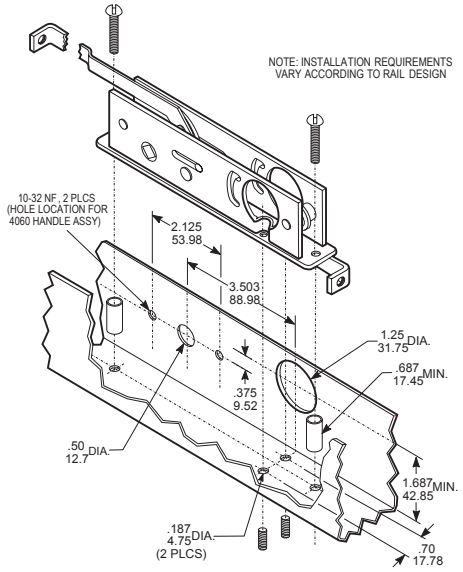

ADAMS RITE MANUFACTURING CO.

260 Santa Fe Street, Pomona, CA 91767
Phone: (909) 632-2300 Fax: (909) 632-2369

1875 Two Point Deadbolt

TRADEMARK
HARDWARE
WORLD OF QUALITY HARDWARE
WWW.TMHARDWARE.COM