TRADEMARK HARDWARE
WORLD OF QUALITY HARDWARE

Product Specs

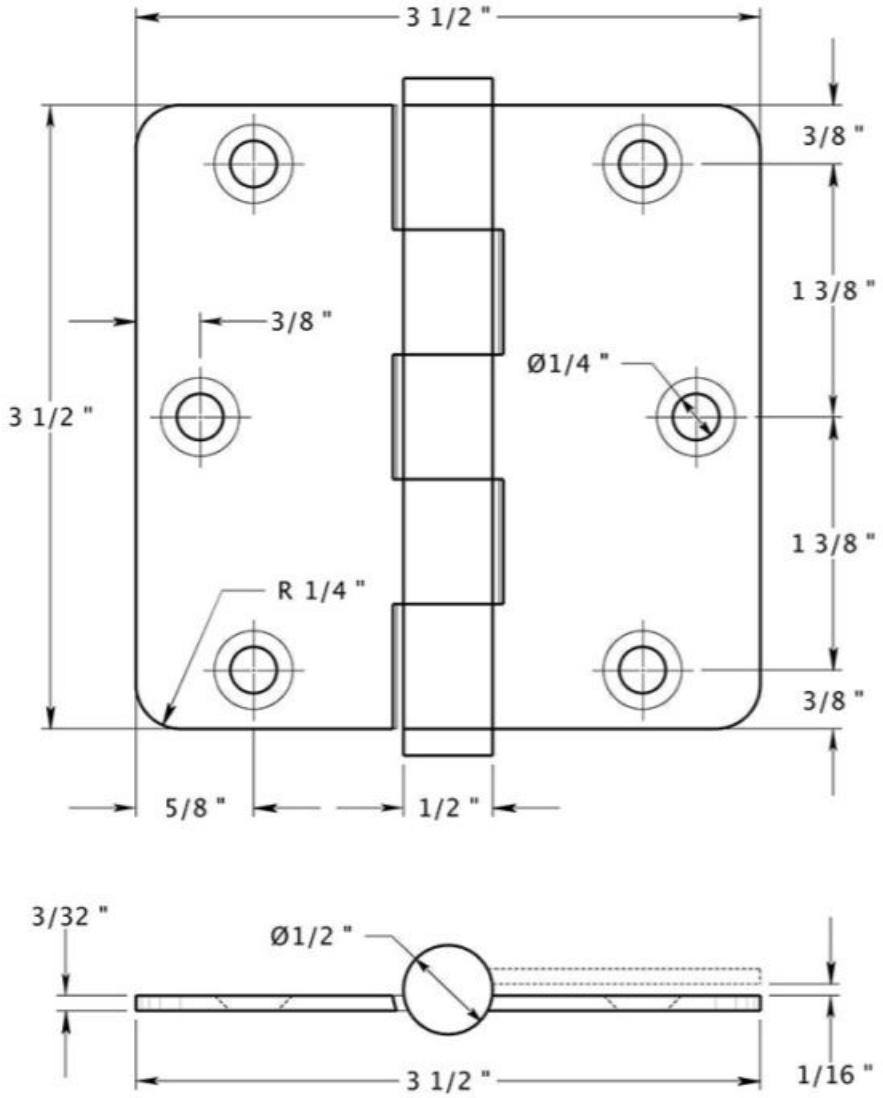

SKU: DDSB35R4-R

www.tmhardware.com 845-388-1300 845-388-1388 sales@tmhardware.com