TRADEMARK HARDWARE
WORLD OF QUALITY HARDWARE

PRODUCT SPECS

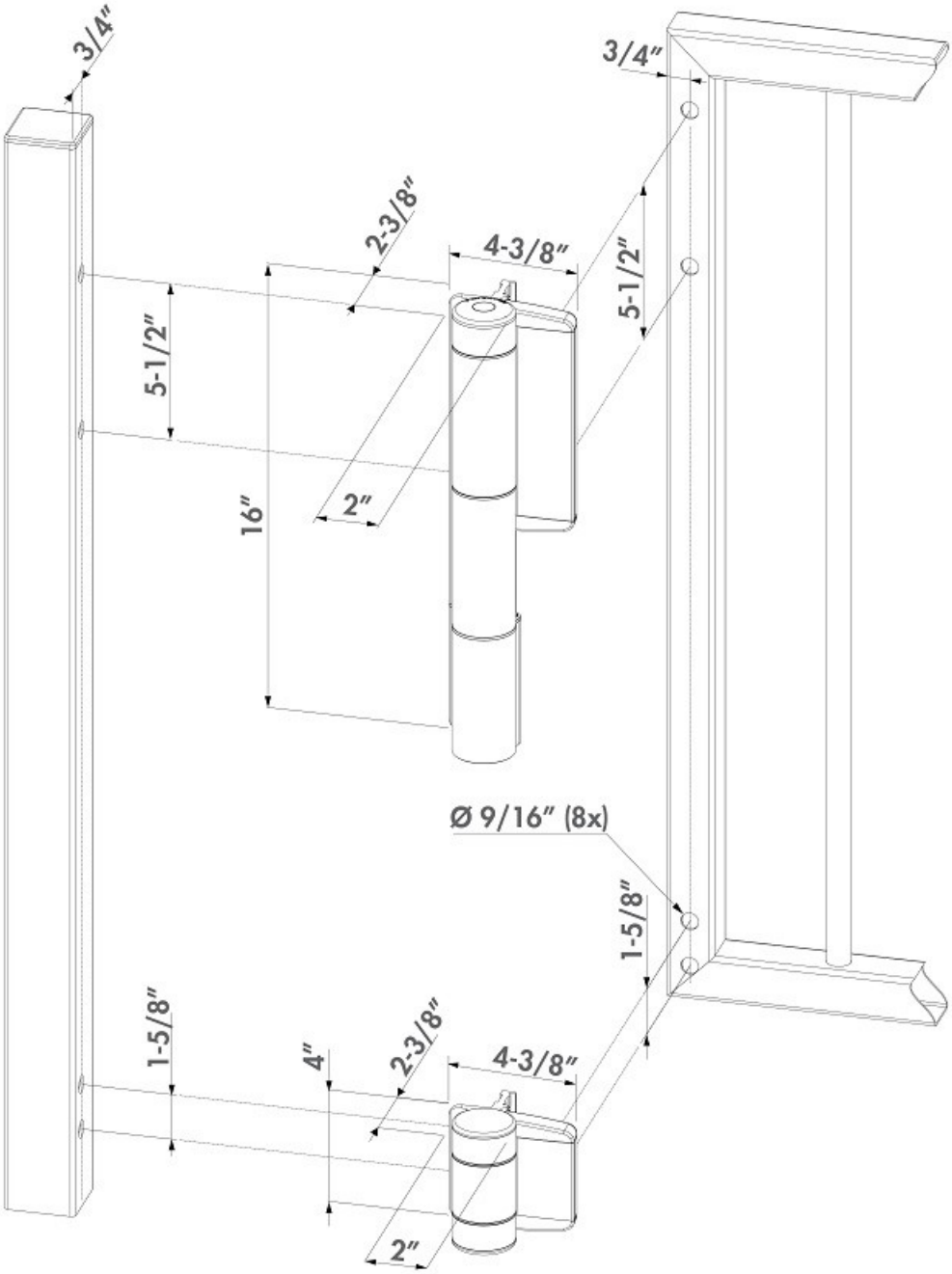

SKU: L_MAMMOTH180