TRADEMARK HARDWARE
WORLD OF QUALITY HARDWARE

PRODUCT SPECS

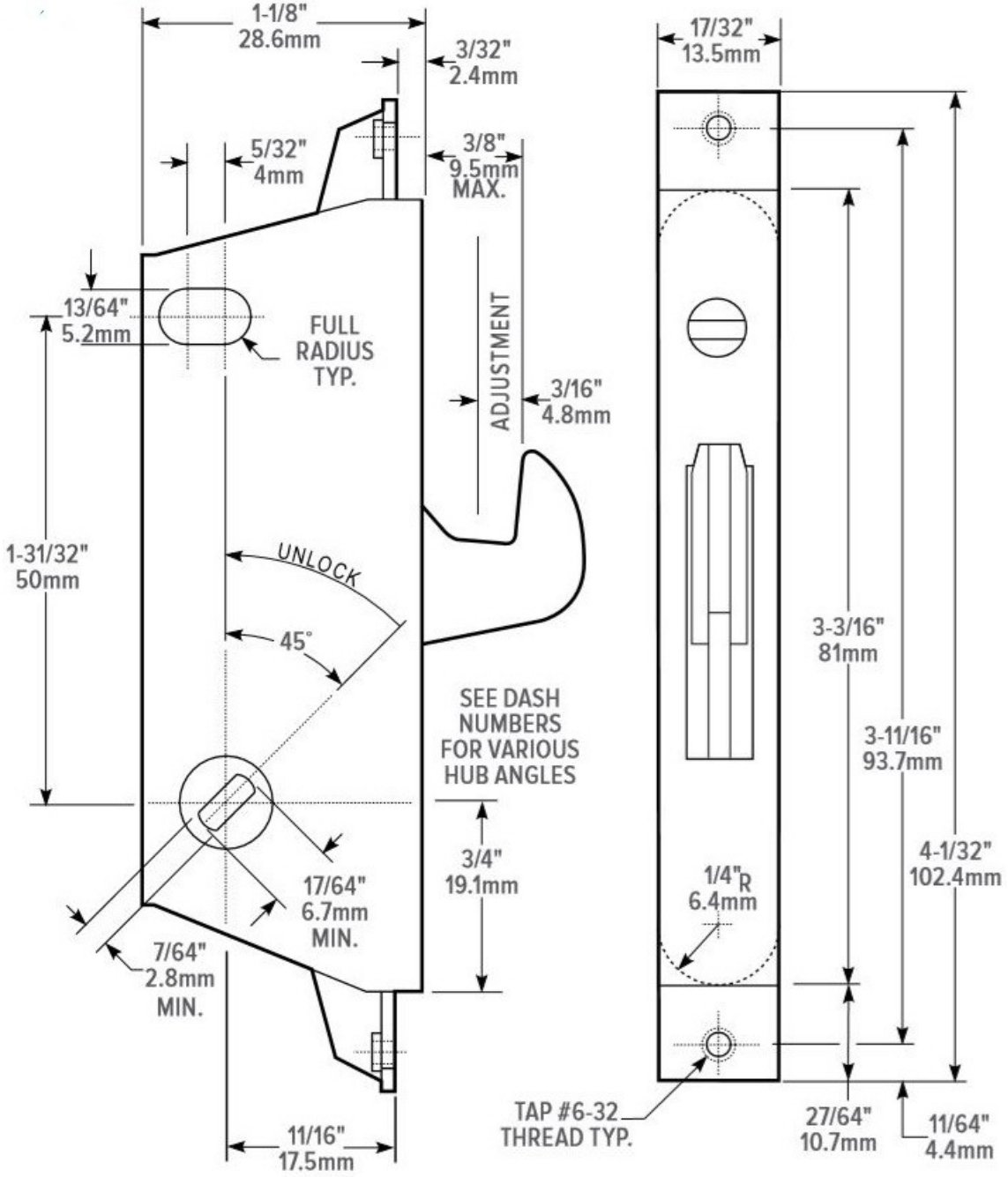

SKU: AMS1847