#510 & #600 CAMTROL PIVOT MORTISE APPLICATION IN WOOD FLOOR

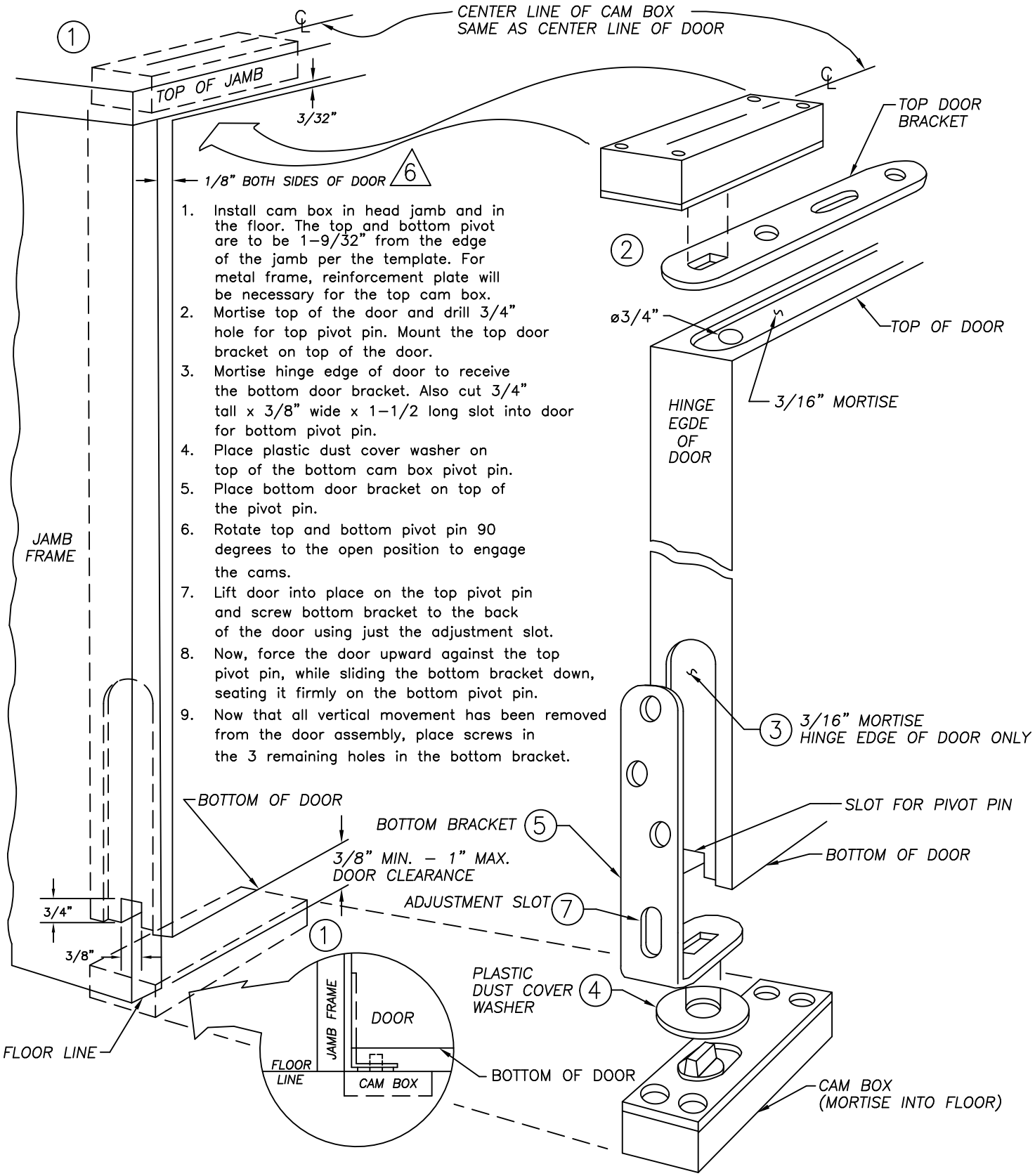

1. Install cam box in head jamb and in the floor. The top and bottom pivot are to be 1–9/32" from the edge of the jamb per the template. For metal frame, reinforcement plate will be necessary for the top cam box.
2. Mortise top of the door and drill 3/4" hole for top pivot pin. Mount the top door bracket on top of the door.
3. Mortise hinge edge of door to receive the bottom door bracket. Also cut 3/4" tall x 3/8" wide x 1–1/2 long slot into door for bottom pivot pin.
4. Place plastic dust cover washer on top of the bottom cam box pivot pin.
5. Place bottom door bracket on top of the pivot pin.
6. Rotate top and bottom pivot pin 90 degrees to the open position to engage the cams.
7. Lift door into place on the top pivot pin and screw bottom bracket to the back of the door using just the adjustment slot.
8. Now, force the door upward against the top pivot pin, while sliding the bottom bracket down, seating it firmly on the bottom pivot pin.
9. Now that all vertical movement has been removed from the door assembly, place screws in the 3 remaining holes in the bottom bracket.

HAGER COMPANIES
Trademark HARDWARE
TMHardware.com