TRADEMARK HARDWARE
WORLD OF QUALITY HARDWARE

FULL MORTISE
TEMPLATE HINGES

Template No. T 315
Rev. '96

SIZES: 5 x 4, 5 x 4 1/2, 5 x 5, 5 x 6, 5 x 7, 5 x 8

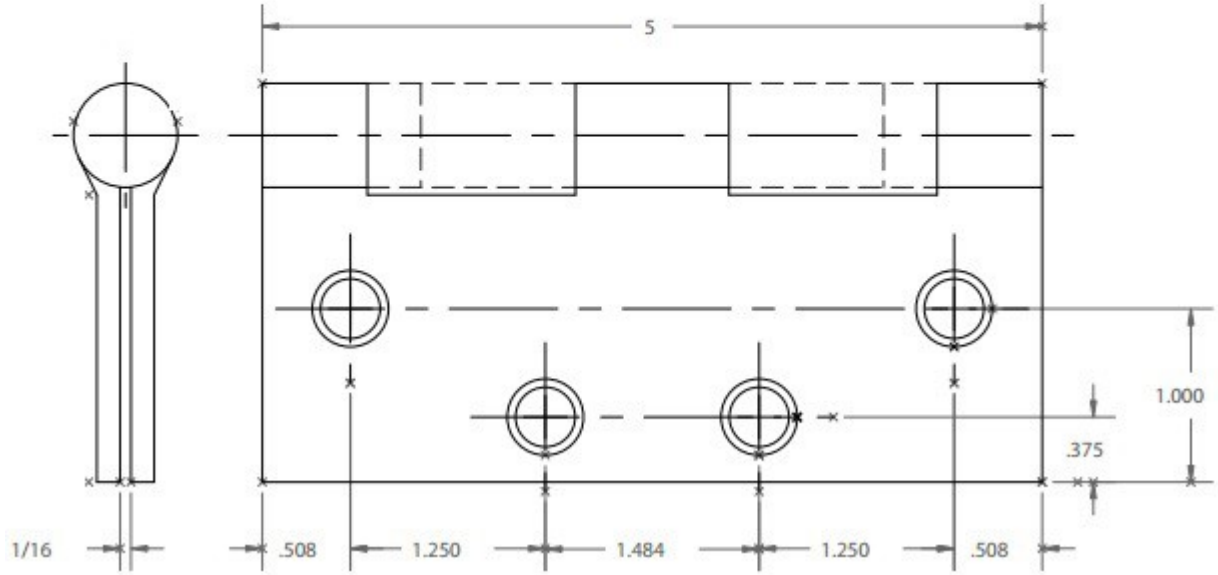

SKU: HBB1279