TRADEMARK HARDWARE
WORLD OF QUALITY HARDWARE

PRODUCT SPECS

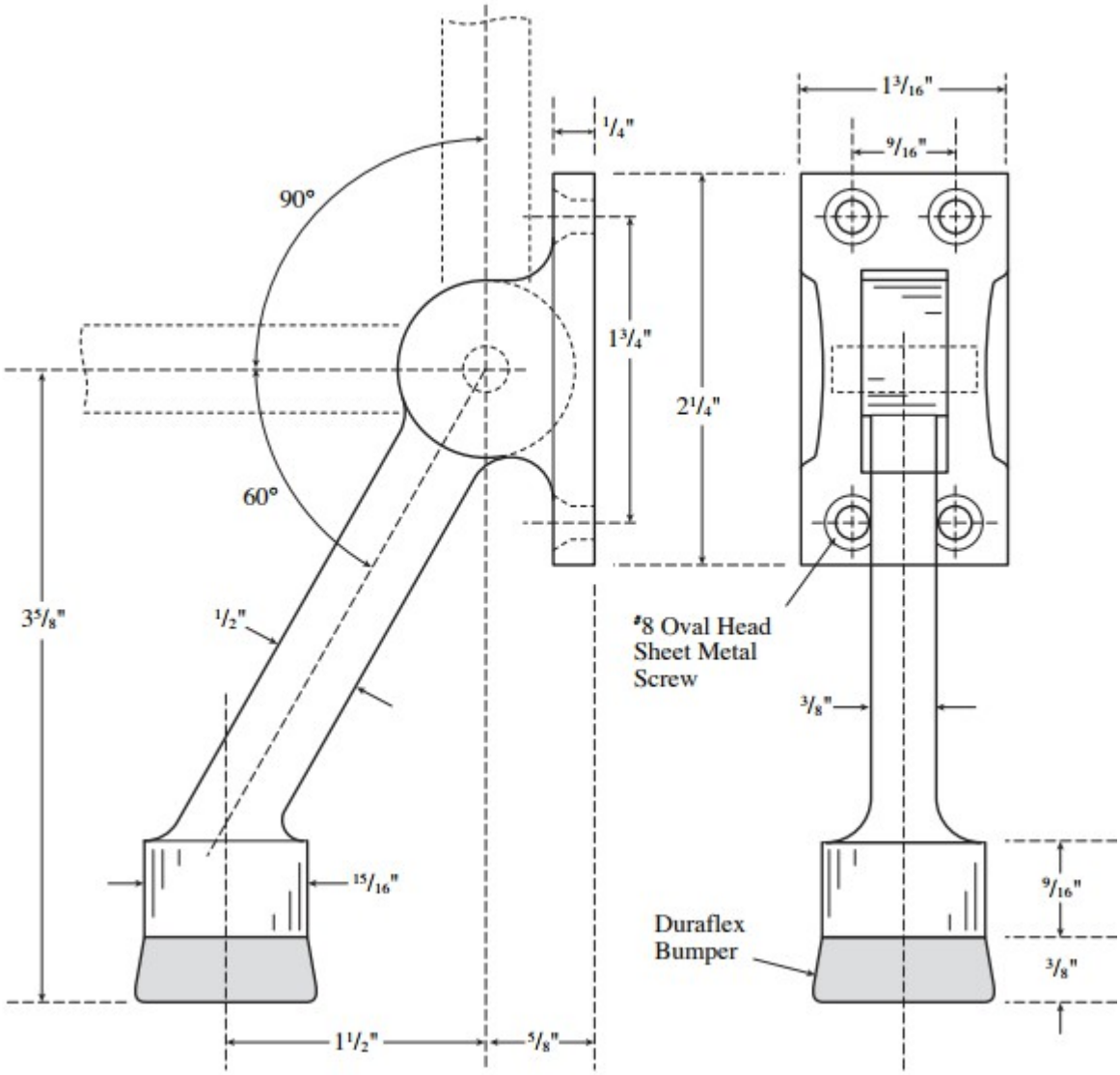

SKU: R461

www.tmhardware.com 845-388-1300 845-388-1388 sales@tmhardware.com