TRADEMARK HARDWARE
WORLD OF QUALITY HARDWARE

PRODUCT SPECS

NOT TO SCALE

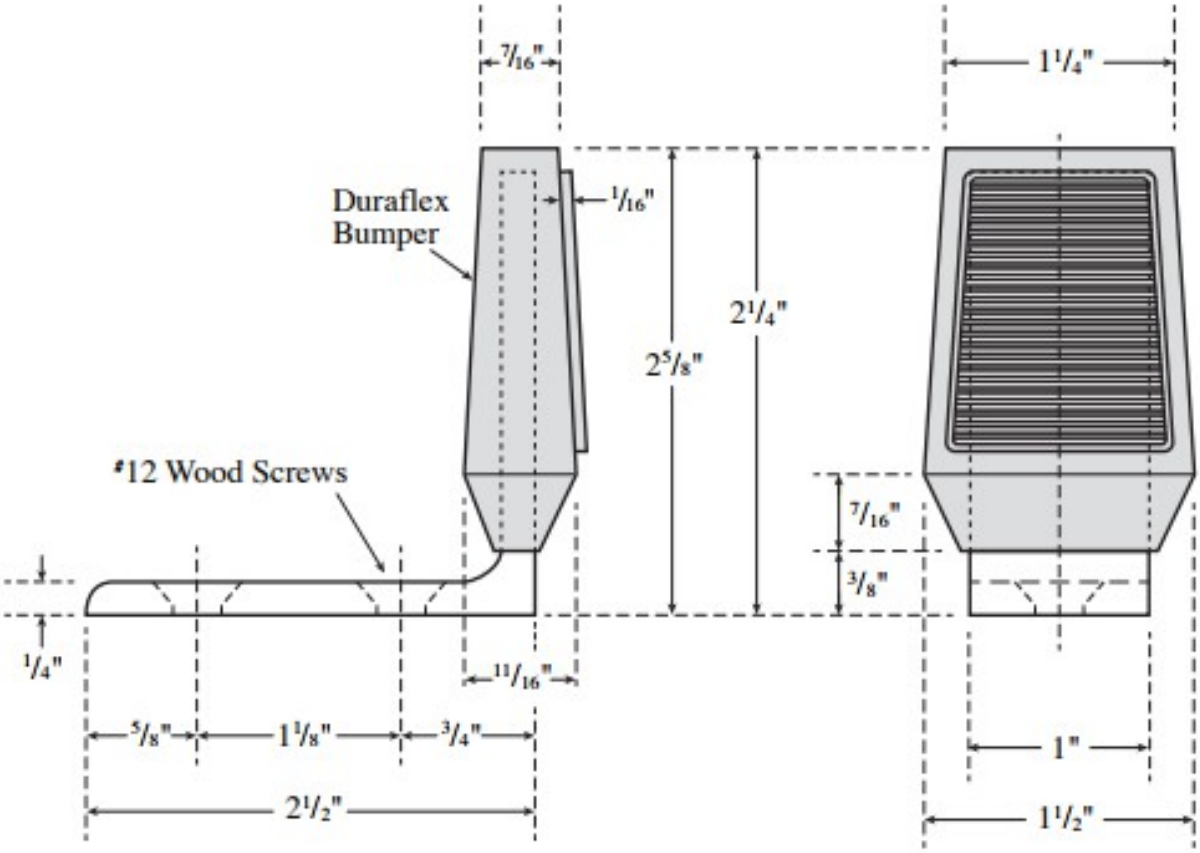

FASTENERS NOTE:
2 ea. #12 x 1 1/2" Flat Head Sheet Metal Screws,
2 ea. Plastic Anchors

SKU: R486